MSME Zed SILVER
ZERO DEFECT ZERO EFFECT

GEC
SHOT BLASTING

INDUSTRIAL
BLAST ROOM SYSTEM
WITH OPENABLE ROOF

HEAVY DUTY SOLUTION FOR SUPERIOR
SURFACE PREPARATION

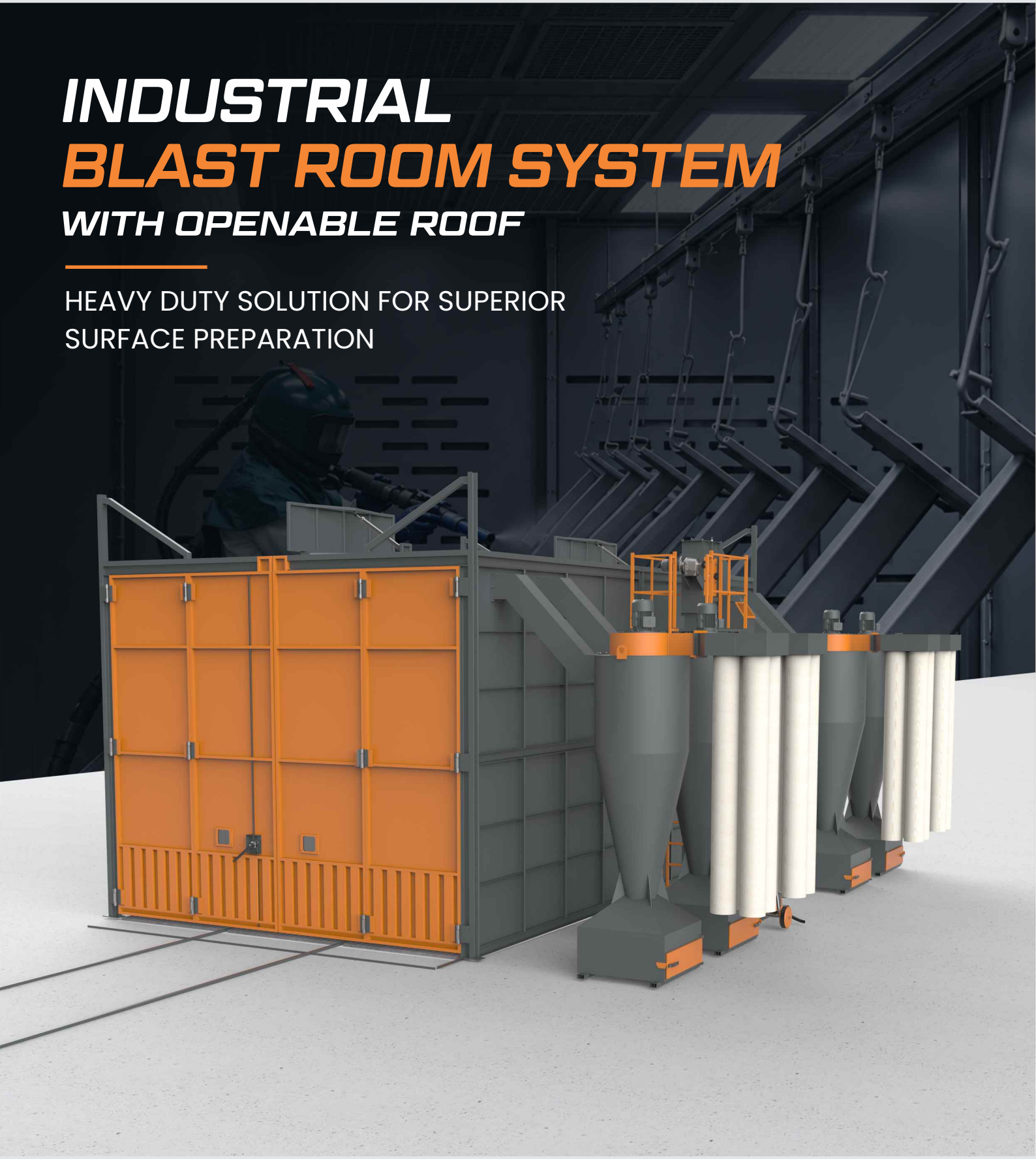

www.gecblasting.com
raju@gecblasting.com

BLAST ROOM SYSTEM

WITH OPENABLE ROOF | DUST COLLECTION SYSTEM

Types of Mechanical Recovery

- **Single Screw Partial Reclaim System:** Cost-effective design for low to medium productivity, automatic reclaiming.
- **"H" Shaped Partial Reclaim System:** Medium to high production levels, efficient media recovery.
- **"U" Shaped Partial Reclaim System:** Medium to high production levels, suitable for large workpieces.
- **Full Floor Reclaim System:** Fully automatic abrasive reclaim, designed for high production requirements.
- **Pneumatic Recovery:** Suitable for lightweight media, low-maintenance, no moving parts.
- **Scraper Floor Recovery System:** Collects spent abrasive and contaminants using pushers, minimal maintenance.

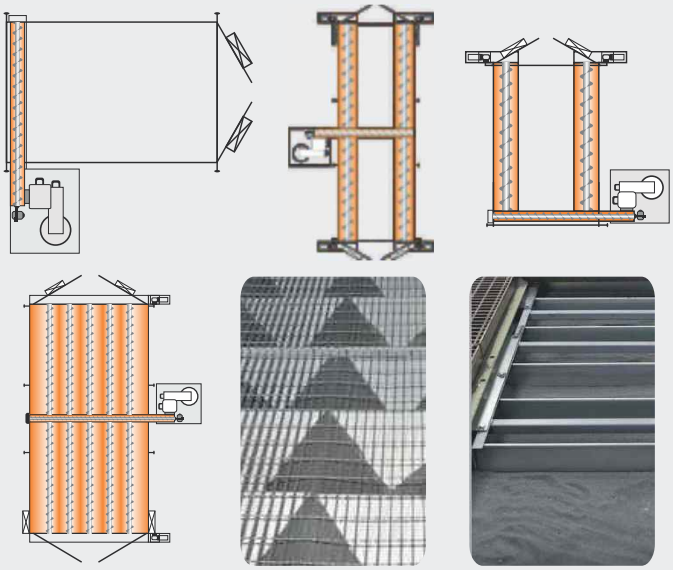

Abrasive Blasting Machine with Safety Gear

The abrasive blasting machine uses compressed air to accelerate abrasive media at high velocity, providing controlled and efficient surface cleaning, roughening of finishing. it is used with complete safety gear to protect the operator from dust and flying particles.



- Blast Pot (Pressure Vessel)
- Air control Valve
- Abrasive Hose & Nozzle
- Blast Helmet with air Supply
- Protective Suit, Gloves & Boots
- Optional: Remote control

Abrasive Blasting Machine with Safety Gear



- Openable roof panels for easy loading and unloading
- Large access doors for large workpieces
- Abrasive recovery floor system
- Dust extraction ducting
- Cyclone dust collector
- Cartridege filter unit

Dust collection & Abrasive Separation



Cyclone Dust Collector
Separates coarse dust and abrasive particles from the air stream.



Cartridge Dust Collector
Captures Fine dust with High efficiency Cartridge Filters (99% +).



Bucket Elevator
Lifts recovered abrasive from the collection hopper to the storage bin



Screw Conveyor
Transfers abrasive to the reclaim bin or storage system efficiently.

www.gecblastingc.com raju@gecblastingc.com

Blast Room Accessories & Options

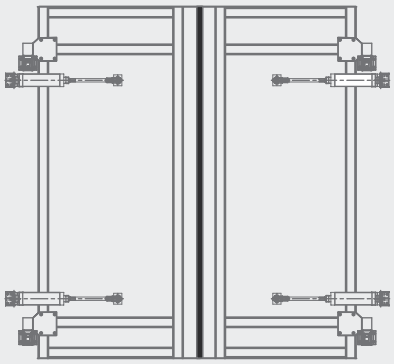

Pneumatic Door

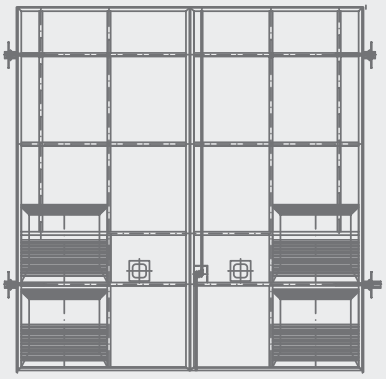

Hinge Type Two/Four Fold

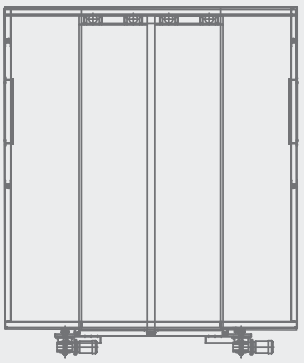

Sliding Motorized

Control & Automation Systems



PLC CONTROL PANEL



AIR PREPARATION UNIT



Recessed Hopper with Bucket Elevator

OTHER IMPORTANT COMPONENTS



Refractory Liners



Blast Hose & Couplings



Nozzles



Filter Media



Grating

CONTACT US

+91-8890960957

www.gecblasting.com

raju@gecblasting.com

GEC SHOT BLASTING